HICKMAN
EDGE SYSTEMS

EdgeBox RI Perimeter Blocking System

ORDER SPECIFICATION FORM

ANSI/SPRI/FM4435/ES-1 TEST PRESSURES UP TO 911 PSF (VERTICAL) AND 526 PSF (HORIZONTAL)

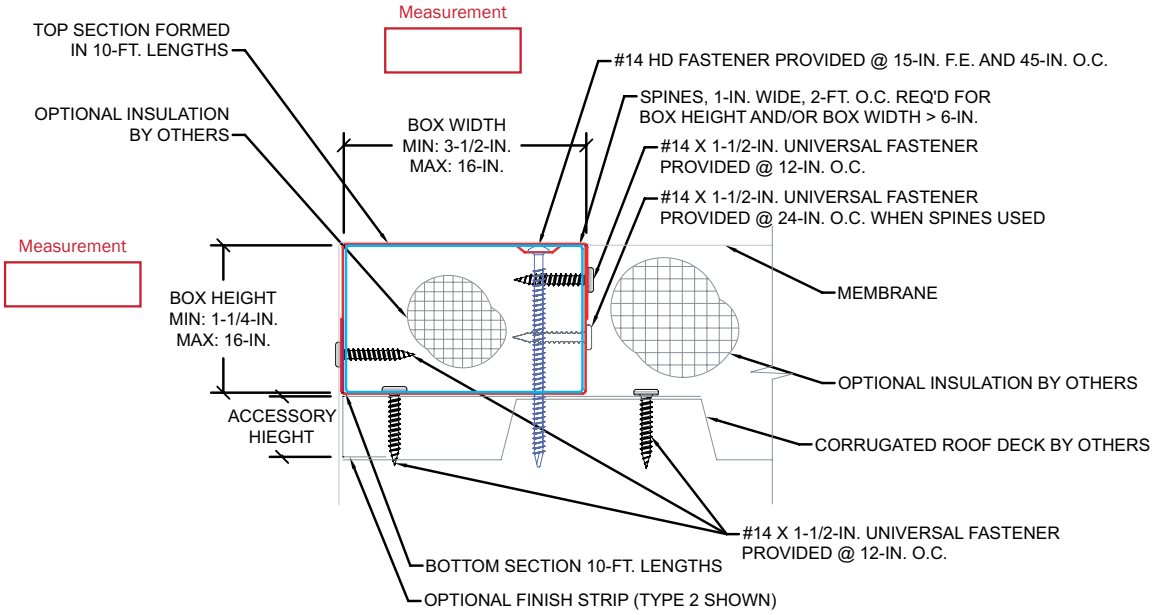

PRE-DRILL WITH 3/16-IN. DRILL BIT FOR MASONRY CONDITIONS.

CONTACT US FOR APPROPRIATE RECOMMENDATIONS NEEDED TO MEET/EXCEED ANSI/SPRI/FM4435/ES-1 DESIGN CRITERIA

QUANTITY		MATERIAL	ADDITIONAL ACCESSORIES		MATERIAL
___	Total LF	☐ Mill Galvanized	___	Total LF - Finish strip, Type 1	☐ Mill Galvanized
___	End Caps (___ Left, ___ Right)	☐ _____	___	Total LF - Finish strip, Type 2	☐ _____
			___	Total LF - Closure strip	
DIMENSIONS		**THICKNESS**	___	Height	**THICKNESS**
___	Box Width	☐ 20 Ga			☐ 20 GA
___	Box Height	☐ _____			☐ _____

APPROVALS: Contact manufacturer for verification of test report data on your project.

ANSI/SPRI/FM4435 /ES-1 TESTED

FM APPROVED

CUSTOMER APPROVAL

☐ Approved for Fabrication
☐ Approved with Changes
☐ Not Approved

Authorized Customer Signature

Title Date

Job Name:	Job #:	By:
Customer:	Project Location:	Date:
Representative:	Architect:	Sheet of

HICKMAN
EDGE SYSTEMS

EdgeBox RI Perimeter Blocking System

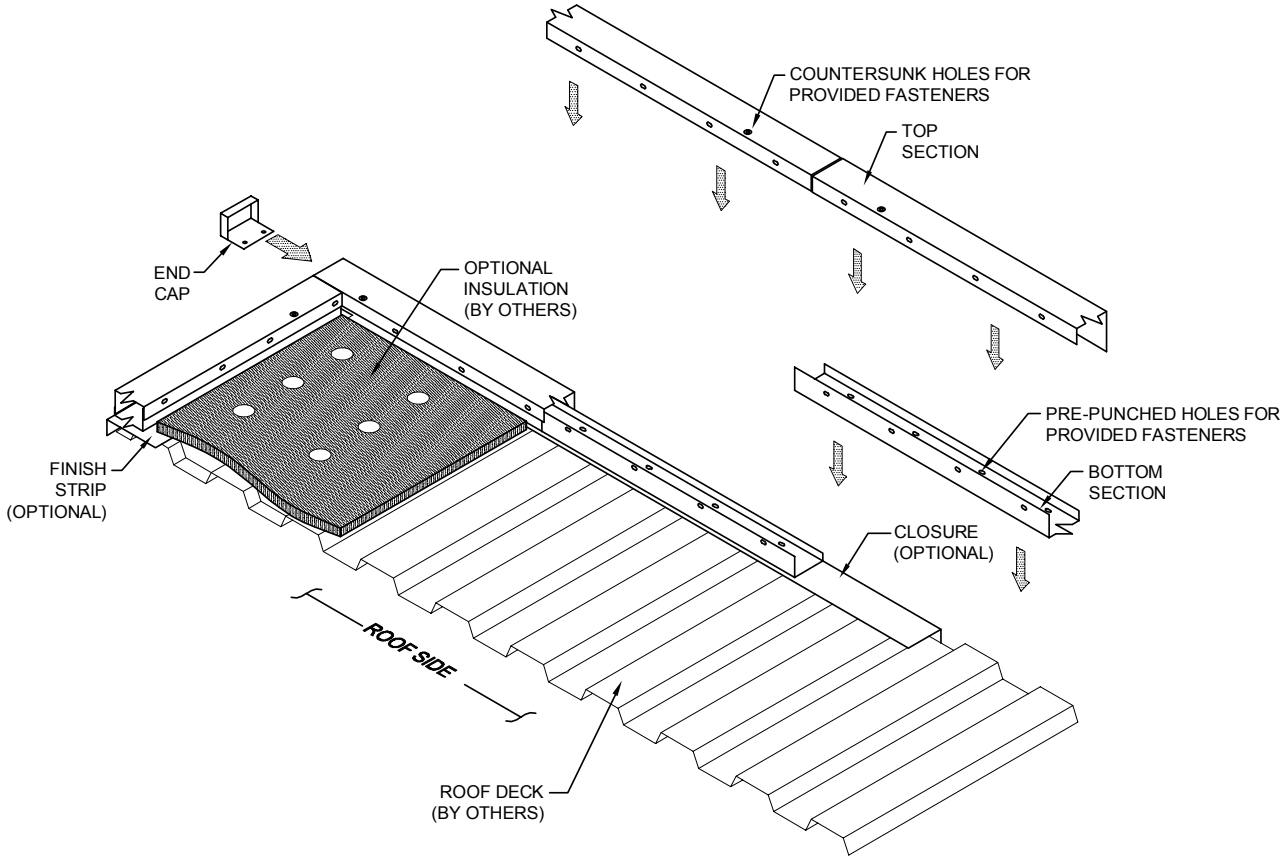

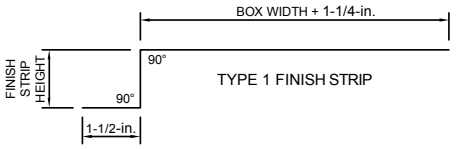

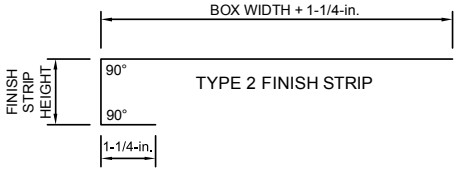

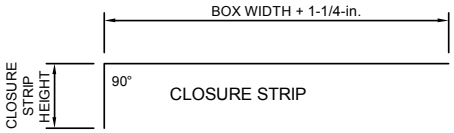

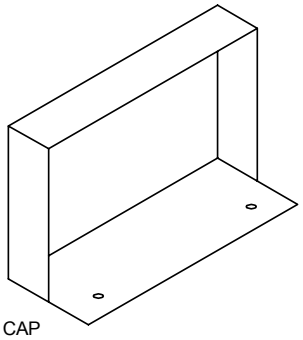

END CAP

FOR END OF RUN OR OUTSIDE MITER CONDITIONS

HICKMAN
EDGE SYSTEMS

4 Commerce Way | Arden, NC 28704
(800) 892-9173 | (828) 676-1700 | Hickmanedgesystems.com

Copyright ©2021. All rights reserved.

Superior productivity.
Superior performance.

EM1073 Rev. 02102021